ATTENTION PLEASE CHECK THE ULTRAFLO WEBSITE AT www.ultraflovalve.com TO ENSURE YOU HAVE THE MOST RECENT COPY OF THIS DOCUMENT

NOTES:

1. ALL DIMENSIONS IN INCHES
2. VALVE O.D. AND FLANGE BOLT CIRCLE MUST SHARE COMMON CENTER LINE. VALVE DESIGN TO BE PLACED BETWEEN ANSI 125 OR 150 LB FLANGES (NOT FOR USE WITH ASA 250 OR 300 LB FLANGES).
3. Q DIMENSION: IS THE MINIMUM FLANGE OR PIPE I.D. TOLERABLE FOR PROTECTION OF DISC SEALING EDGE WHILE OPERATING CENTERED BETWEEN FLANGES.

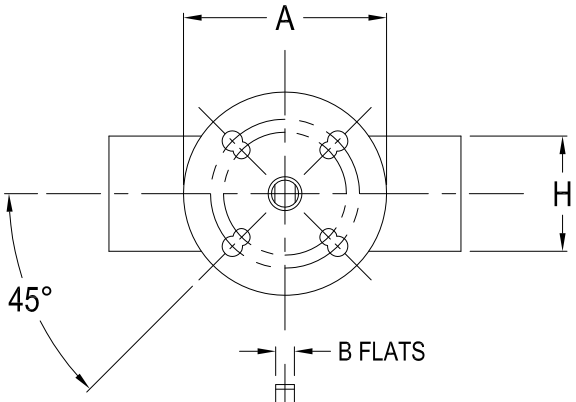

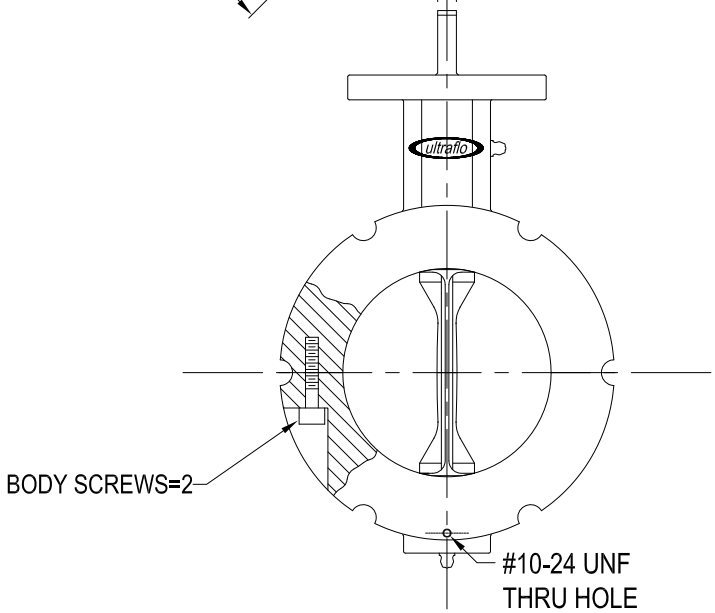

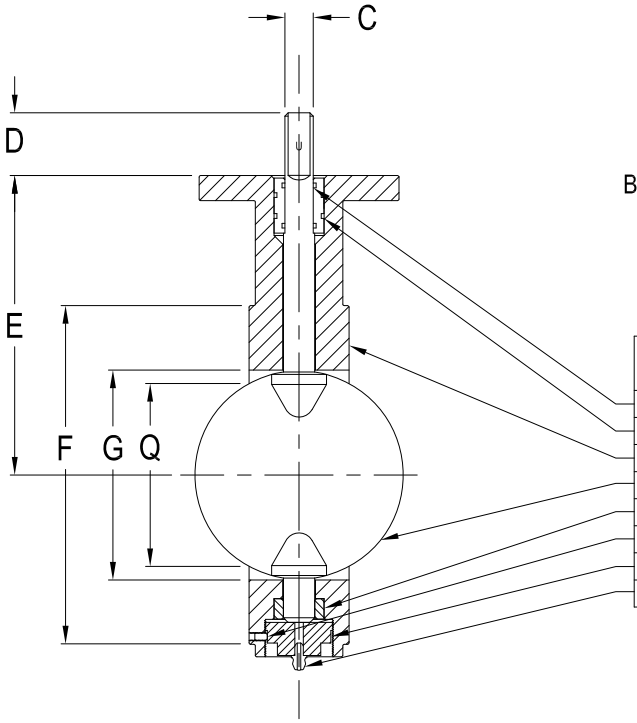

NAME	NUMBER REQUIRED	MATERIAL	PART NUMBER
"O" RING	4		
TOP BUSHING	1		
BODY	2		
DISC-STEM	1		
BOTTOM BUSHING	1		
SET SCREW	1		
THREADED PLUG	1		
3/16 ZERK FITTING	2		

VALVE DIMENSIONS

										TOP PLATE DRILLING					
										ISO DRILLING			STD DRILLING		
SIZE	A	B	C	D	E	F	G	H	Q	B. CIRCLE	HOLES	HOLE DIA.	B. CIRCLE	HOLES	HOLE DIA.
4	4.000	.375	.563	1.125	6.000	6.875	4.210	2.000	3.719	2.760	4	.375	3.250	4	.438
6	4.000	.500	.750	1.125	6.625	8.750	6.185	2.125	5.813	2.760	4	.375	3.250	4	.438
8	6.000	.500	.750	1.125	8.313	11.000	8.190	2.500	7.813	4.020	4	.438	5.000	4	.562
*THE 8" HAS AN ADDITIONAL TOP PLATE DRILLING													*3.250	4	.438
10	6.000	.625	.875	2.000	9.125	13.375	10.205	2.500	9.906	4.020	4	.438	5.000	4	.562
12	6.000	.625	.875	2.000	10.625	16.125	12.170	3.000	11.844	4.020	4	.438	5.000	4	.562

ZONE	REV	DATE	BY	APP'D	ECN	DESCRIPTION
A-4	10	02/20/19	TAL	JPL		.500 WAS .438, .750 WAS .625
B2	9	04/30/10	DSS	CJH	374	CHGD NOTES/REMOVED MATERIAL
B2	8	12/12/08	TAL	CJH		SET SCREW WAS #8-36
B4	7	11/13/08	CJH	CJH		CHANGE DIM "J" TO "Q" FOR CHORD
B3	6	03/28/08	DSS	CJH		CHGD STEM/ADDED 8" TOP PLATE DRILL
B3	5	06/26/07	DSS	CJH		ADDED THREADED PLUG
C1	4	12/29/06	DSS	CJH		ADDED ZERK FITTING
A4	3	10/01/06	BGB	CJH		REMOVED 2" AND 3"
B4	2	09/01/06	BGB	CJH		REMOVED PACKING
D1	1	06/01/05	TJM	TJM		ADDED ISO DRILLING

ultraflo Ultraflo Corporation
A Subsidiary of Bray International, Inc.
#8 Trautman Ind. Dr.
Ste. Genevieve, Mo.
63670 800-950-1762

	NAME	DATE
DRAWN BY	TJM	07/01/04
CHECKED	TJM	07/01/04

4"-12" 395 SERIES FLYASH HOUSING

PART: 395-1

ECN: DWG: 395-1